Growing Raspberries in the Home Garden

Raspberries are a favorite of many home gardeners. The fruit can be eaten fresh or processed into jam, jelly, or juice. Surplus fruit also can be frozen.

The four types of raspberries commonly grown in home gardens include black, purple, summer-bearing red, and fall-bearing red. There also are several yellow raspberry varieties (cultivars).

Raspberry plants are relatively easy to grow, and are hardy and productive in most of Iowa. If given proper care, a 100-foot-long row of red raspberries can produce 100 to 150 pints of fruit.

Growth and Fruiting Characteristics

Raspberries have unique growth and fruiting characteristics. The plant's roots and crown are perennial, while the canes (stems) are biennial. A raspberry plant survives and produces fruit for many years. However, individual canes live only two growing seasons and then die.

The shoots of purple, black, and summer-bearing red raspberries are strictly vegetative during the first growing season. These first year canes are referred to as primocanes. The following year, these same canes (now called floricanes) flower, produce fruit, and then die.

The growth and fruiting characteristics of fall-bearing red raspberries differ slightly from other types. Fall-bearing cultivars naturally produce two crops. The first crop is produced in late summer or early fall at the tips of the current season's growth. The following year, the lower portions of the same canes produce a summer crop. After the second crop, the canes die.

Red raspberries produce new canes from buds located at the base of the previous season's growth and on their roots. Because red raspberries sucker freely, they need to be confined to a 1- to 2-foot-wide hedgerow. Black and most purple raspberries produce new canes from buds located at the base of the existing canes. Since black and purple raspberries don't sucker from their roots, they tend to remain in their original planting area.

The growth and fruiting characteristics of yellow raspberries are similar to red raspberries. The only difference is fruit color. The care and pruning of summer-bearing and fall-bearing yellow raspberries are identical to their red counterparts.

Site Selection

Raspberries adapt to a wide range of soil types. They grow best in well-drained, fertile soils with a pH of 6.0 to 6.8. Raspberries grow poorly in heavy clay or poorly drained soils. Incorporating well-rotted barnyard manure or compost often improves poor soils. Planting in raised beds can improve drainage.

When selecting a planting site, choose an area that receives full sun. The planting site should receive at least 6 hours of direct sun each day. Avoid shady areas near large trees and shrubs. Also, avoid areas that are heavily infested with perennial weeds. Control of perennial weeds, such as quackgrass, is extremely difficult in a raspberry planting. If possible, remove all wild brambles near the new raspberry planting to prevent the spread of disease.

Start preparing the raspberry site in late summer or fall before a spring planting. Early preparation allows adequate time to control weeds, conduct a soil test to determine fertilizer needs, and work manure or compost into the soil. Early soil preparation may also permit planting one to two weeks earlier in the spring.

Gardeners can have their soil tested at Iowa State University's Soil and Plant Analysis Laboratory. Soil sample forms are available at **www.agron.iastate.edu/soiltesting**.

IOWA STATE UNIVERSITY
Extension and Outreach

PM 1706 Revised September 2012

Plant Material and Sources

Purchase virus-free raspberry plants from a reliable garden center, nursery, or mail-order company. Plants obtained from an old patch are often diseased. Some virus-infested raspberries may appear healthy, but grow and yield poorly.

Raspberry plants may be purchased as bare-root or as tissue cultured plants. Tissue cultured plants are generally small, green, actively growing plants that are grown in plant cells or plugs in a greenhouse.

If planting of dormant, bare-root stock must be delayed after purchase, moisten the packing material around the roots of the raspberry plants and store them in a cool location, such as a cellar or garage.

Plant Spacing

To obtain top yields, proper raspberry spacing is essential. Red raspberries may be planted 1½ to 3 feet apart within the row. Choose the 1½-foot spacing for earlier maximum plant density and production. Leave 6 to 8 feet between rows. For best results, maintain red raspberry plantings in 1- to 2-foot-wide hedgerows.

Plant black and purple raspberries 3 feet apart within the row. Space rows 6 to 8 feet apart. Black and purple raspberries grow in clumps and remain in their original location.

Planting

Early spring (late March and April) is the best time to plant dormant, bare-root raspberry plants in Iowa. Plant actively growing, tissue cultured plants when the danger of frost has past. Harden actively growing plants outdoors for a few days before planting in the garden.

Before planting, apply and incorporate the recommended type and amount of fertilizer (based on soil test results) into the top 6 to 8 inches of soil. Test garden soil about once every five years. Do not fertilize an area if its fertility level is unknown.

Remove dormant raspberry plants from storage when ready to plant. If the roots are dry, soak the roots in water for several hours before planting. Set the raspberry plants slightly deeper into the soil than they were in the nursery. Plant red raspberries 2 inches deeper, and black and purple raspberries 1 inch deeper, than previously grown. Dig a hole slightly larger than the spread of the plant's root system. Position the plant in the hole, spread out its roots, and backfill with soil. Firmly press the soil around the roots as you backfill. Water each plant thoroughly and prune back the canes, leaving a maximum of 2 to 3 inches above the soil.

If fertilizer was not added during soil preparation, apply a starter fertilizer solution to each plant. Use a water soluble fertilizer following label directions; or dissolve 2 or 3 tablespoons of a complete garden fertilizer, such as 5-10-5, in one gallon of water and apply 1 to 2 cups to each plant.

Training and Trellising

Maintain red raspberry plants in a 1- to 2-foot-wide hedgerow. Remove any suckers that grow outside the hedgerow with a rototiller or spade. Do not allow red raspberries to develop into a wide, solid patch. Cultural practices become extremely difficult and yields are reduced when red raspberries grow into a large, dense thicket.

Black and purple raspberries grow in clumps. Pinch the new shoots (primocanes) of black and purple raspberries when they reach a height of 36 to 48 inches. Pinching promotes lateral branch development and increases crop yield. If allowed to grow unpinched, canes grow long and fall onto the ground. These canes often root and produce new plants where the tips touch the ground. Tip-layered plants crowd the existing planting and make cultural practices more difficult. Remove any tip-layered plants. See the summer pruning section under **Black and Purple Raspberries** for additional pruning information.

Red, black, and purple raspberries can be supported with a trellis. A trellis keeps the canes off the ground, and the fruit are cleaner and easier to pick. Pruning is also simplified. A trellis prevents canes from falling over during heavy rains or strong winds, which is especially important when plants are heavily laden with fruit.

There are several different trellis systems. A two-wire permanent trellis is commonly used for raspberries in the home garden. Its construction requires posts, galvanized wire, and 2- by 4-inch lumber. See diagram 1 for construction details.

A temporary trellis may be constructed of posts and twine. Space the posts approximately 15 feet apart and support the canes with twine. This temporary structure is most suitable for fall-bearing red raspberries grown exclusively for the fall crop.

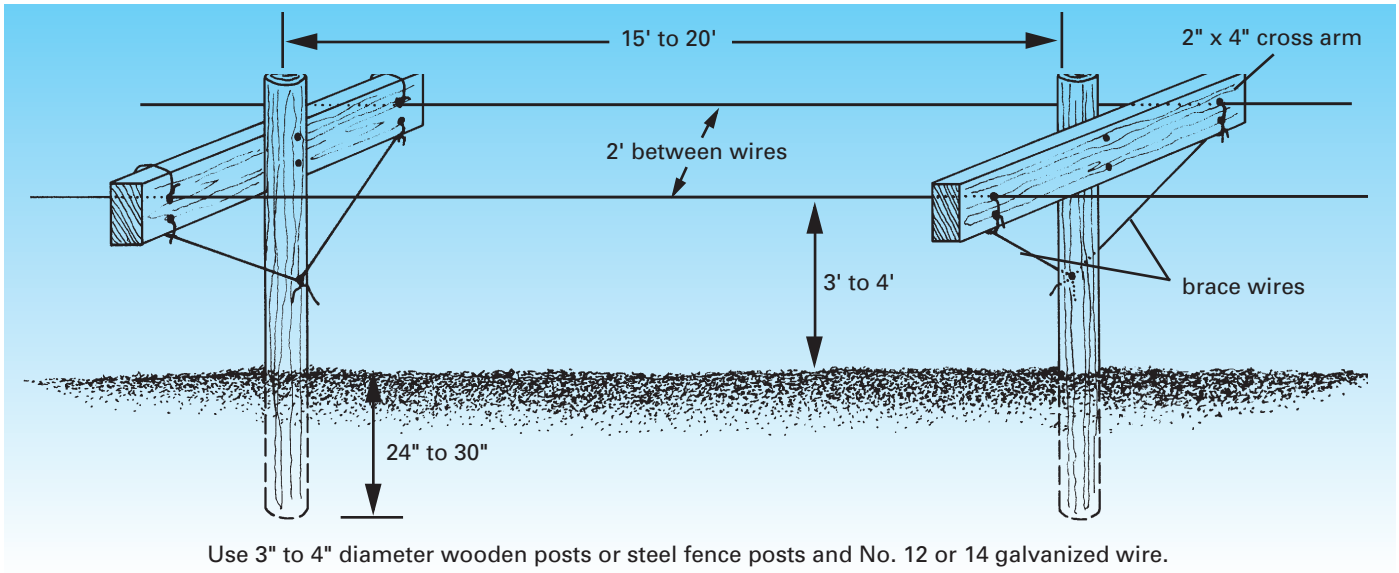

Diagram 1. Raspberry trellis

Tying Canes to the Trellis

If using a permanent trellis system, carefully pull and tie the canes of black, purple, summer-bearing red, and fall-bearing red (two crop system) raspberries to the support wires after pruning in spring. Use twine or cloth strips to tie the canes to the wires. Diagram 2 illustrates this procedure. Tying the canes to the trellis wires allows for better light penetration into the center of the row and promotes stronger primocane development. Harvesting and pruning of dying floricanes is easier because the tied canes are more accessible.

Pruning

To obtain maximum yields, raspberries must be pruned properly. Pruning produces higher yields by increasing berry numbers and size. It also helps control diseases. Appropriate pruning procedures are based on the growth and fruiting characteristics of the plants.

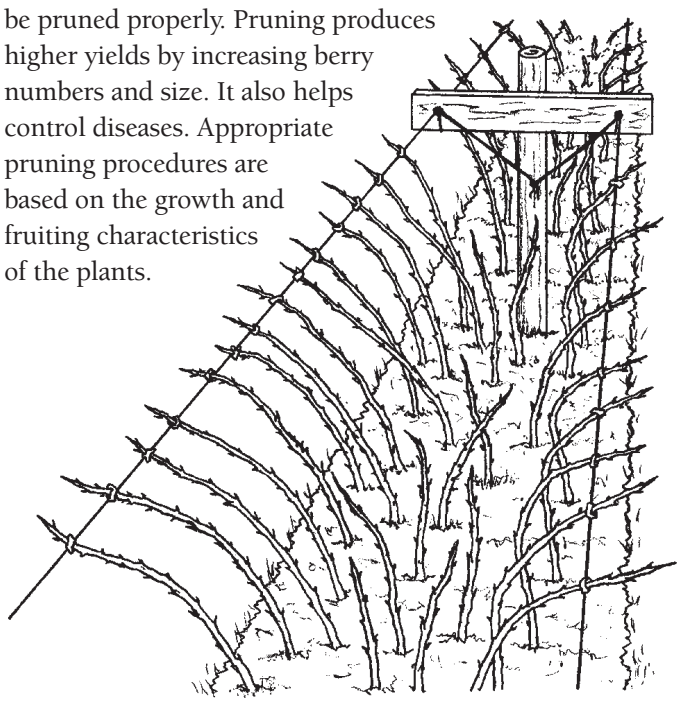

Diagram 2. Tying canes of red raspberries to wire supports.

Summer-bearing Red Raspberries

Spring Pruning

In March or early April, remove all weak, diseased, and damaged canes at ground level. Leave the most vigorous canes, those that are approximately ¼ inch in diameter when measured 30 inches from the ground. When finished, remaining canes should be spaced about 6 inches apart.

Also, prune out the tips of the canes that died because of winter injury. Cut them back to live tissue. If the canes suffered little winter dieback, remove the top ¼ of the canes.

Red raspberries sucker profusely. Maintain plants in a 1- to 2-foot-wide hedgerow using a rototiller or spade.

Summer Pruning

After the last harvest, prune off the old fruiting canes (floricanes) at the soil surface. Remove the pruned canes from the garden and destroy them.

Fall-bearing Red Raspberries—Two-Crop System

Spring Pruning

Remove all weak, diseased, and damaged canes in March or early April, leaving only the most vigorous canes. Prune out the tips of the canes that fruited the previous season. Remove approximately the upper one-third of the canes. The lower portions of the canes will produce the summer crop. Maintain the plants in a 1- to 2-foot-wide hedgerow.

Summer Pruning

After harvesting the summer crop, remove and destroy the old fruiting canes.

Fall-bearing Red Raspberries—One-Crop System

Spring Pruning

Prune all canes back to ground level in early spring. Doing so eliminates the summer crop, but often allows the fall crop to mature one to two weeks earlier. No summer pruning is necessary. Total crop yield is larger using the one crop system versus the two crop system.

Black and Purple Raspberries

Spring Pruning

In March or early April, remove all small, weak canes, leaving only four or five of the largest, most vigorous canes per clump or plant. See diagram 3. Cut back the lateral branches to 12 inches in length for black raspberries and 18 inches for purple raspberries.

Summer Pruning

Pinch out or cut off the shoot tips when the new growth reaches a height of 36 to 48 inches. Remove the top 3 to 4 inches of the shoots. Pinching encourages lateral shoot development and increases the fruiting surface area, resulting in higher yields. Because all new shoots will not reach the desired height at the same time, it will be necessary to go over the planting approximately once each week between late May and late July. Discontinue shoot tip removal at the end of July. Canes that develop after July are small, weak, and unproductive; prune them out the following spring.

After the last harvest, remove the old fruiting canes at the soil surface and destroy them.

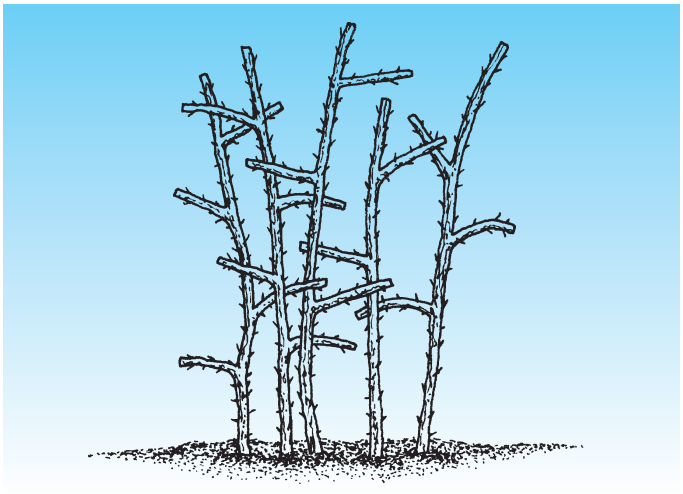

Diagram 3. Black or purple raspberries after spring pruning

Weed Management

Weed control in raspberries is necessary to reduce competition for water, nutrients, and sunlight. Cultivation and mulches are the most practical control measures for home gardeners. Cultivate the raspberry planting frequently during the spring and summer months. Small weed seedlings are destroyed easily. Large weeds are more difficult. Do not cultivate deeper than 2 to 3 inches in order to prevent injury to the raspberry plant roots.

Possible mulching materials include straw, crushed corncobs, chopped cornstalks, sawdust, wood chips, dried lawn clippings, and shredded leaves. The depth of mulch needed depends on the material used. Optimum depth ranges from 3 to 4 inches for fine materials, such as sawdust, to 8 to 10 inches for straw on well-drained soils. Avoid deep mulches on poorly drained soils to discourage root diseases. When mulching red raspberries, apply the full depth of material between rows. Within rows, apply only enough mulch to control weeds, allowing new canes to emerge in spring. Since mulches gradually decompose, apply additional material each year.

Fertilization

Fertilize established raspberries in spring before new growth begins. Apply 4 to 5 pounds of 10-10-10 or a similar analysis fertilizer to each 100-foot row. Uniformly broadcast the fertilizer in a 2-foot band. If the raspberries are mulched with sawdust or wood chips, apply a slightly heavier rate (5 to 6 pounds of 10-10-10 per 100-foot row) of fertilizer. Conduct a soil test every five years to determine if nutrient levels are adequate. Do not fertilize raspberries in late spring or summer. Late spring or summer fertilization encourages succulent, late season growth that is susceptible to winter damage.

Manure may be used as an alternative to commercial fertilizers. Apply 50 to 100 pounds of well-rotted barnyard manure (cow, hog, or horse) to each 100-foot row.

Irrigation

For good raspberry production, adequate soil moisture levels are necessary throughout the growing season. The most critical time for moisture is between bloom and harvest. During this time, raspberries require 1 to 1½ inches of water per week, either from rain or irrigation. Insufficient moisture during fruit development may result in small, seedy berries.

Harvesting

Raspberries are ripe when the fruit is fully colored. Ripe berries slip easily from the receptacles, which remain on the plant. Raspberries are very perishable; they should be harvested every two or three days, handled carefully, and refrigerated or frozen immediately. Raspberries can be stored for only three to five days in the refrigerator.

Suggested Raspberry Cultivars for Iowa

Cultivar	Berry Size	Remarks
Summer Red Raspberries		
Boyne	Medium	Very productive and extremely hardy
Killarney	Medium to large	Fruit are firm, possess good flavor
Latham	Medium to large	Medium to large berries; plants are extremely vigorous and sucker freely
Nova	Medium to large	Berries are firm with good flavor
Fall Red Raspberries		
Heritage	Medium	Very vigorous plants; berries are firm and attractive
Autumn Bliss	Large	Fruit are large and oval-conic in shape; fruit matures a few days earlier than Heritage
Caroline	Large	Fruit have very good flavor
Yellow Raspberries		
Anne	Medium to large	Soft fruit, very good flavor
Golden Harvest	Medium	Fruit are firm, fair flavor
Purple Raspberries		
Brandywine	Large	Brandywine produces a good crop; flavor is best for jams, jellies, and pies
Royalty	Large	Much sweeter than Brandywine, also produces a larger crop in Iowa
Black Raspberries		
Black Hawk*	Medium	An Iowa State introduction; plants are high yielding; one of the hardiest black raspberries
Bristol*	Medium	Medium size berries; firm with good flavor
Jewel*	Large	Berries are larger than Bristol; good quality

Cultivars denoted by an * are not suitable for northern Iowa. They should be planted only in central and southern Iowa. Remaining cultivars can be grown throughout the state.

Prepared by Richard Jauron, extension horticulturist, and Gail Nonnecke, university professor, Department of Horticulture.

...and justice for all
The U.S. Department of Agriculture (USDA) prohibits discrimination in all its programs and activities on the basis of race, color, national origin, age, disability, and where applicable, sex, marital status, familial status, parental status, religion, sexual orientation, genetic information, political beliefs, reprisal, or because all or part of an individual's income is derived from any public assistance program. (Not all prohibited bases apply to all programs.) Persons with disabilities who require alternative means for communication of program information (Braille, large print, audiotape, etc.) should contact USDA's TARGET Center at 202-720-2600 (voice and TDD). To file a complaint of discrimination, write to USDA, Director, Office of Civil Rights, 1400 Independence Avenue SW, Washington, DC 20250-9410, or call 800-795-3272 (voice) or 202-720-6382 (TDD). USDA is an equal opportunity provider and employer.

Issued in furtherance of Cooperative Extension work, Acts of May 8 and June 30, 1914, in cooperation with the U.S. Department of Agriculture. Cathann A. Kress, director, Cooperative Extension Service, Iowa State University of Science and Technology, Ames, Iowa.